City of Whittier
BUILDING & SAFETY DIVISION
13230 Penn Street, Whittier, California 90602-1772
(562) 567-9320 Fax (562) 567-2872

Window and Door Replacements

INTRODUCTION

All Window and exterior door replacements require a building permit regardless of how they are classified.

- A simple floor plan or plot plan is required for planning review and permit issuance. Show existing window and replacement window sizes and type.
- Provide a brochure from the window manufacturer and pictures of the building for planning review and approval.
- Provide a detail of the required trim per the Planning Division requirements.
- Provide a window schedule on the plan listing the sizes, SHGC and U Factors as required by the 2008 California Energy Efficiency Standards.
- Replacement windows without a Performance Energy Analysis shall comply with the Mandatory Measures Prescriptive requirements.
- A maximum U Factor of 0.38 and SHGC of 0.40 are required in Climate Zone 9.

***Please Note: Structures built prior to 1941 are subject to the W.M.C. 18.84 Historical Resources Ordinance. Refer to the Planning Division for additional information.**

Properties located within the Very High Fire Hazard Severity Zone require the new/or and replacement windows shall be of tempered glass. For vinyl frame windows, the corners shall be of a welded construction with a metal reinforcement.

Additional requirements when changing a window to a sliding door are:

- Floors and landings at exterior doors. There shall be a landing or floor on each side of each exterior door. The width of each landing shall not be less than the door served. Every landing shall have a minimum dimension of 36 inches measured in the direction of travel. Exterior landings shall be permitted to have a slope not to exceed 1/4 unit vertical in 12 units horizontal (2-percent). R311.3
- Floor elevations at the required egress doors. Landings or floors at the required egress door shall not be more than 1/2 inches lower than the top of the threshold. R311.3.1

  Exception: *The exterior landing or floor shall not be more than 7-3/4 inches below the top of the threshold provided the door does not swing over the landing or floor. When exterior landings or floors serving the required egress door are not at grade, they shall be provided with access to grade by means of a ramp in accordance with Section R311.8 or a stairway in accordance with Section R311.7.*

- Exterior lighting required. A switch and light is required outside each outdoor entrance or exit.
- Moving the electrical wiring to allow a new door and adding the required lighting will require an electrical permit.

- Interior and exterior alterations, repairs or additions having a valuation in excess of $ 1,000 or when one or more sleeping rooms are added or created, the entire dwelling shall be provided with Smoke and Carbon Monoxide alarms per CRC Section R314 and R315.

- Smoke alarms are required in all sleeping rooms, outside each sleeping area in the immediate vicinity of the bedrooms, on each floor level including basements and habitable attics. Carbon Monoxide alarms are required outside the bedrooms and on each floor level when fuel-burning appliances are installed and/or dwelling units have attached garages.

EMERGENCY ESCAPE AND RESCUE OPENINGS

Basements, habitable attics and every sleeping room shall have at least one operable emergency escape and rescue opening. Where basements contain one or more sleeping rooms, emergency escape and rescue shall be required in each sleeping room.

- The bottom of the net clear opening not greater than 44 inches measured from the floor, ***and***
- Net clear opening space of 5.7 square feet, ***and***

  Exception: *Net clear opening of 5 square feet for windows at grade level.*

- Net clear opening height of 24 inches, ***and***
- Net clear opening width of 20 inches, ***and***
- Operational constraints. Emergency escape and rescue openings shall be maintained free of any obstructions other than those allowed by this section and shall be operational from the inside of the room without the use of keys, tools or special knowledge.

  Exception: *Group R1 occupancies provided with a monitored fire sprinkler system in accordance with section 903.2.8 may have openable window, permanently restricted to a maximum 4" open position.*

The following details the additional requirements that apply to windows:

- Window wells. The minimum horizontal area of the window well shall be 9 square feet, with a minimum horizontal projection and width of 36 inches. The area of the window well shall allow the emergency escape and rescue opening to be fully opened.

  Exception: *The ladder or steps required by Section R310.2.1 shall be permitted to encroach a maximum of 6 inches into the required dimensions of the window well.*

- Ladder and steps. Window wells with a vertical depth greater than 44 inches shall be equipped with a permanently affixed ladder or steps usable with the window in the fully open position. Ladders or steps required by this section shall not be required to comply with Sections R311. 7 and R311.8. Ladders or rungs shall have an inside width of at least 12 inches, shall project at least 3 inches from the wall and shall be spaced not more than 18 inches on center vertically for the full height of the window well.

- Bulkhead enclosures. Bulkhead enclosures shall provide direct access to the basement. The bulkhead enclosure with the door panels in the fully open position shall provide the minimum net clear opening required by Section R310.1.1. Bulkhead enclosures shall also comply with Section R311.7.8.2.

- Bars, grilles, covers and screens. Bars, grilles, covers, screens or similar devices are permitted to be placed over emergency escape and rescue openings, bulkhead enclosures, or window wells that serve such openings, provided the minimum net clear opening size complies with Sections R310.1.1 to R310.1.3, and such devices shall be releasable or removable from the inside without the use of a key, tool, special knowledge or force greater than that which is required for normal operation of the escape and rescue opening. The release mechanism shall be maintained operable

at all times.

- Window where the opening of the sill portion of the operable window is located more than 72” above the finished grade or surface below, the lowest part of the clear opening of the window shall be a minimum of 24” above the finished floor surface of the room in which the window is located. Glazing between the floor and a height of 24” shall be fixed or have openings such that a 4” diameter sphere may not pass.
- All habitable rooms shall have windows with their total areas equaling at least 8% of the room’s floor area and with their total opening area equaling at least 4% of the room’s floor area.
- All windows require a permanent California Energy Commission Certification label.
- Maintain or replace weather resistive barriers. Inspection is required to verify compliance.
- Bay windows and similar assemblies require the manufacturer’s listed (UL, ICC, or equivalence) installation instructions for permit issuance.
- Glass in doors needs to be tempered glass and glass in windows need to be tempered glass if within 24 inches of a door swing and/or located at a hazardous location as specified in CBC Section 2406.4
- Properties located within the Very High Fire Hazard Severity Zone require the new and/or replacement windows and doors w/glazing shall be of tempered glass per CRC section R327.8.2.1. For vinyl frame windows, the corners shall be of a welded construction with a metal reinforcement.

When installed, skylights and sloped glazing must be of tempered glass or other approved and tested materials and meeting the requirements of the Class A Assembly.

Please note, most plastic skylights and plastic sloped glazing do not meet the fire resistive requirements of the code. To install plastic skylights, the product must be listed, fire rated and tested by a nationally recognized testing laboratory.

TYPICAL OPENABLE WINDOW DIAGRAM

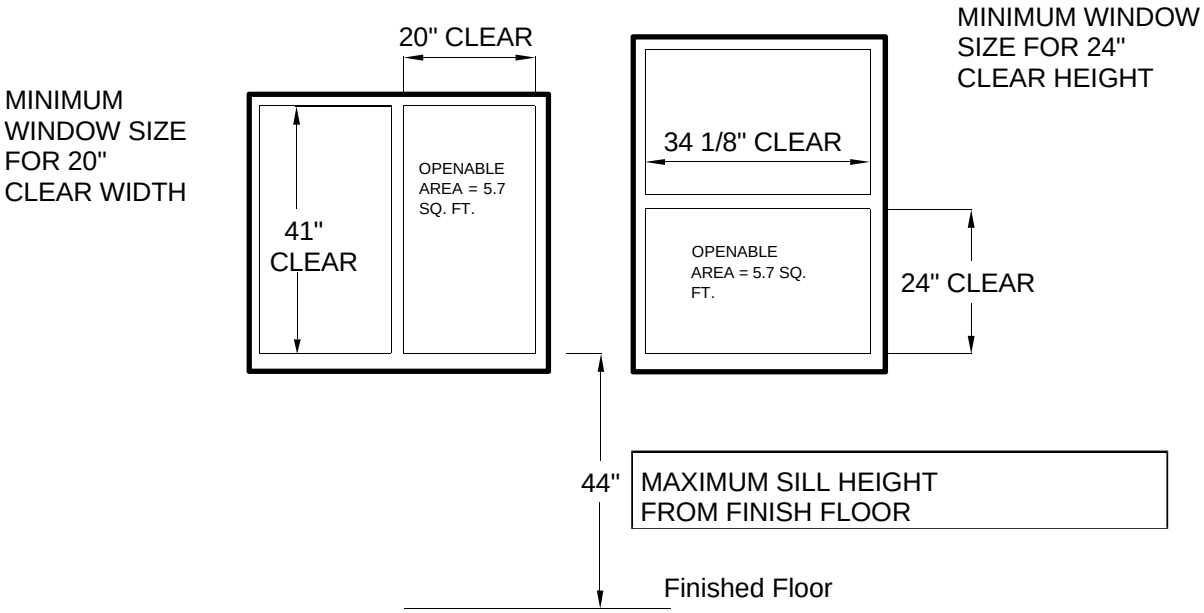

EMERGENCY ESCAPE AND RESCUE WINDOW (EGRESS)

SAMPLE WIDTH / HEIGHT REQUIREMENTS FOR EMERGENCY ESCAPE AND RESCUE

(Dimensions are inches)

WIDTH	20	20.5	21	21.5	22	22.5	23	23.5	24	24.5	25	25.5	26	26.5	27
HEIGHT	41	40	39.1	38.2	37.3	36.5	35.7	34.9	34.2	33.5	32.8	32.2	31.6	31	30.4

WIDTH	27.5	28	28.5	29	29.5	30	30.5	31	31.5	32	32.5	33	33.5	34	34.5
HEIGHT	29.8	29.3	28.8	28.3	27.8	27.4	26.9	26.5	26.1	25.7	25.3	24.9	24.5	24.1	24

***Note**: Using both the minimum sizes for width and height will not obtain the required minimum area (5.7 sq. ft.) The above chart shows the minimum area for a given width or height. This area is larger than the minimum required for ventilation.*

WINDOW INSTALLATION

Approved corrosion-resistive flashings shall be installed shingle fashion in a manor to prevent entry of water into the wall cavity or structural framing components. All flashings shall be installed following the **Window Manufacturer's Instructions** and **ASTM 2112** and **AAMA** installation guidelines.

When applying building paper over wood sheathing (plywood) two (2) layers of Grade D paper are required. Refer to the Window Flashing Detail for additional information.

INSPECTIONS

Inspections may be scheduled either in person at the Building and Safety counter, by telephone during business hours at: (562) 567-9320.

Inspections must be scheduled prior to 3:00 pm on the day prior to the day of the requested inspection. Request received after 3:00 pm will be scheduled for the following business day.

Please indicate any private community gate access code with your inspection request.

The following inspections are typical for window installations.

- Framing and Window flashing.
- Stucco lath repair.
- Rough electrical, if moving outlet or adding a switch and outside light prior to covering with insulation and/or drywall.
- Interior Smoke Detectors & Carbon Monoxide alarms installation(s) and Final Inspection.

Window Flashing Detail

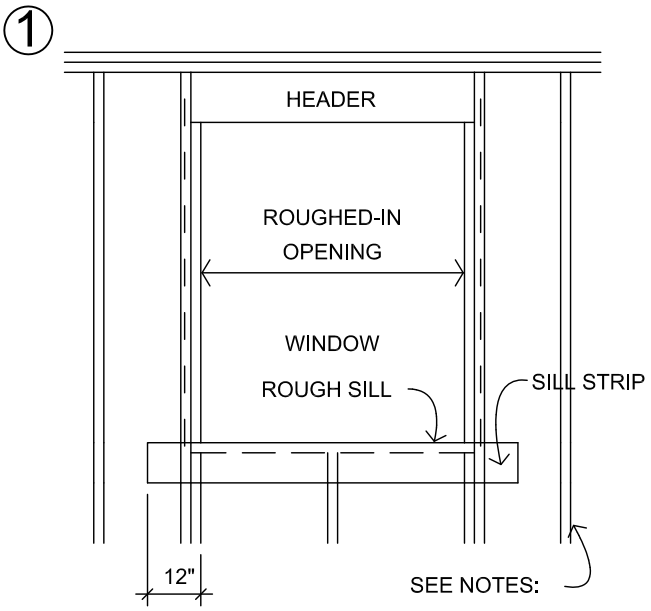

ATTACH A SILL STRIP OF FLASHING MATERIAL AT LEAST 12" WIDE WITH THE TOP EDGE EVEN WITH THE TOP EDGE OF THE ROUGH SILL. EXTEND SILL STRIP AT LEAST 12" BEYOND THE EDGE OF THE ROUGH OPENING FOR WINDOW. ATTACH FLASHING WITH GALVANIZED ROOFING NAILS OR RUST-RESISTANT STAPLES.

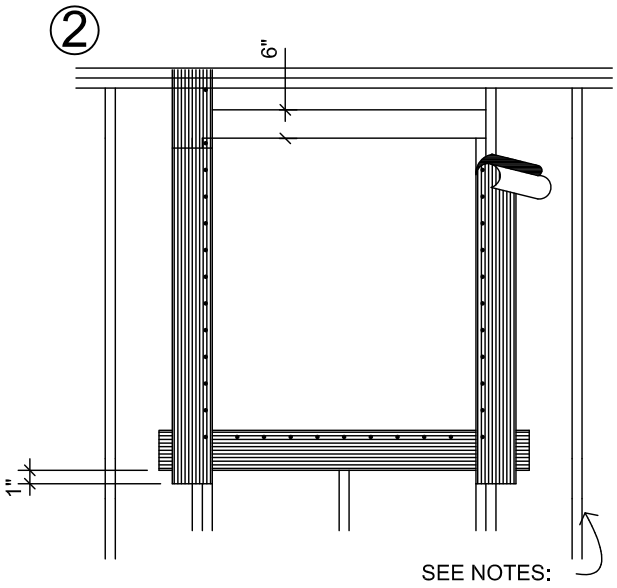

AFTER SILL STRIP IS IN PLACE ATTACH JAMB STRIPS (SIDE OF OPENING) AT LEAST 12" WIDE WITH INSIDE EDGE OF FLASHING FLUSH WITH EDGE OF WINDOW OPENING. START JAMB STRIPS 1" BELOW THE SILL STRIP AND EXTEND JAMB STRIPS 6" ABOVE THE LOWER EDGE OF THE HEADER (TOP OF WINDOW OPENING).

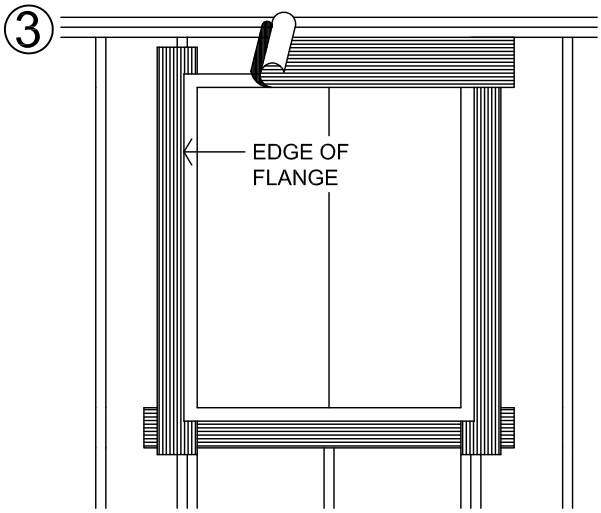

APPLY A CONTINUOUS BEAD OF BUTYL RUBBER SEALANT TO THE BACK SURFACES OF THE WINDOW FLANGE, THEN PLACE THE WINDOW INTO THE ROUGH OPENING WITH FLANGES OVER THE INSTALLED FLASHING STRIPS. AFTER WINDOW IS PLACED, INSTALL THE HEAD FLASHING OVER THE WINDOW FLANGE. THIS IS ANOTHER STRIP OF FLASHING AT LEAST 12" WIDE.

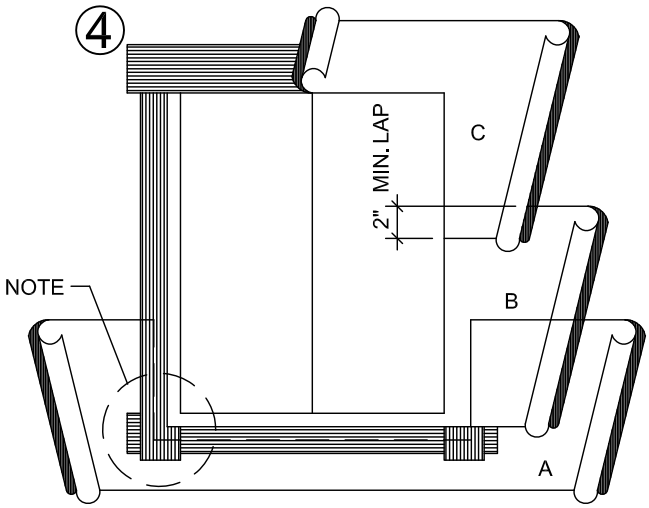

STARTING AT THE BOTTOM OF THE WALL (SOLE PLATE), LAY WATER-RESISTANT PAPER UNDER THE SILL STRIP. CUT ANY EXCESS WATER-RESISTANT PAPER THAT MAY EXTEND ABOVE THE SILL FLANGE ON EACH SIDE OF THE OPENING. (SHOWN IN DIAGRAM AS SHORT DASHED LINES). INSTALL SUCCEEDING COURSES OF WATER-RESISTANT PAPER (B, C, ETC.) OVER JAMB AND HEAD FLANGES IN SHINGLE-BOARD FASHION.

NOTES:

1. THIS DETAIL APPLIES TO ALL EXTERIOR PENETRATIONS INCLUDING WINDOWS AND DOORS. USE "MOISTOP" FLASHING BY FORTIFIBER CORP., OR EQUAL WHENEVER POSSIBLE FOR FLASHING MATERIAL. CAULK BACK OF WINDOW FRAMES BEFORE SETTING. USE WINDOWS THAT ARE WATERTIGHT.
2. 26 GA. G.I. FLASHING REQUIRED AS SHOWN IN OTHER WINDOW DETAILS TO BE INSTALLED BY THE SHEET METAL CONTRACTOR.
3. LINE WIRE, WHEN USED AS BACKING TO SUPPORT WATER-RESISTANT BUILDING PAPER OR FELT BENEATH LATH FOR STUCCO SHOULD BE INSTALLED ACCORDING TO INDUSTRY STANDARDS AND PRACTICE. NO ATTACHMENT DEVICE NOR THE WIRE BACKING SHOULD COVER OR PENETRATE FLASHING MATERIAL. PERIPHERAL FLASHING AT ALL EDGES OF WALL OPENING MUST COVER WIRE BACKING.